FIRST ANGLE PROJECTION

(ALL DIMENSIONS ARE IN mm)

DRG. NO. 2-94-50-0237

SH. 01 OF 01

THIS DOCUMENT IS THE PROPERTY OF BHARAT HEAVY ELECTRICALS LIMITED. IT MUST NOT BE USED DIRECTLY OR INDIRECTLY IN ANY WAY DETRIMENTAL TO THE INTEREST OF THE COMPANY

COMPUTER FILE NAME 2500237.DWG

REF. DRG. NO.

SIGN. AND DATE

INVENTORY NO

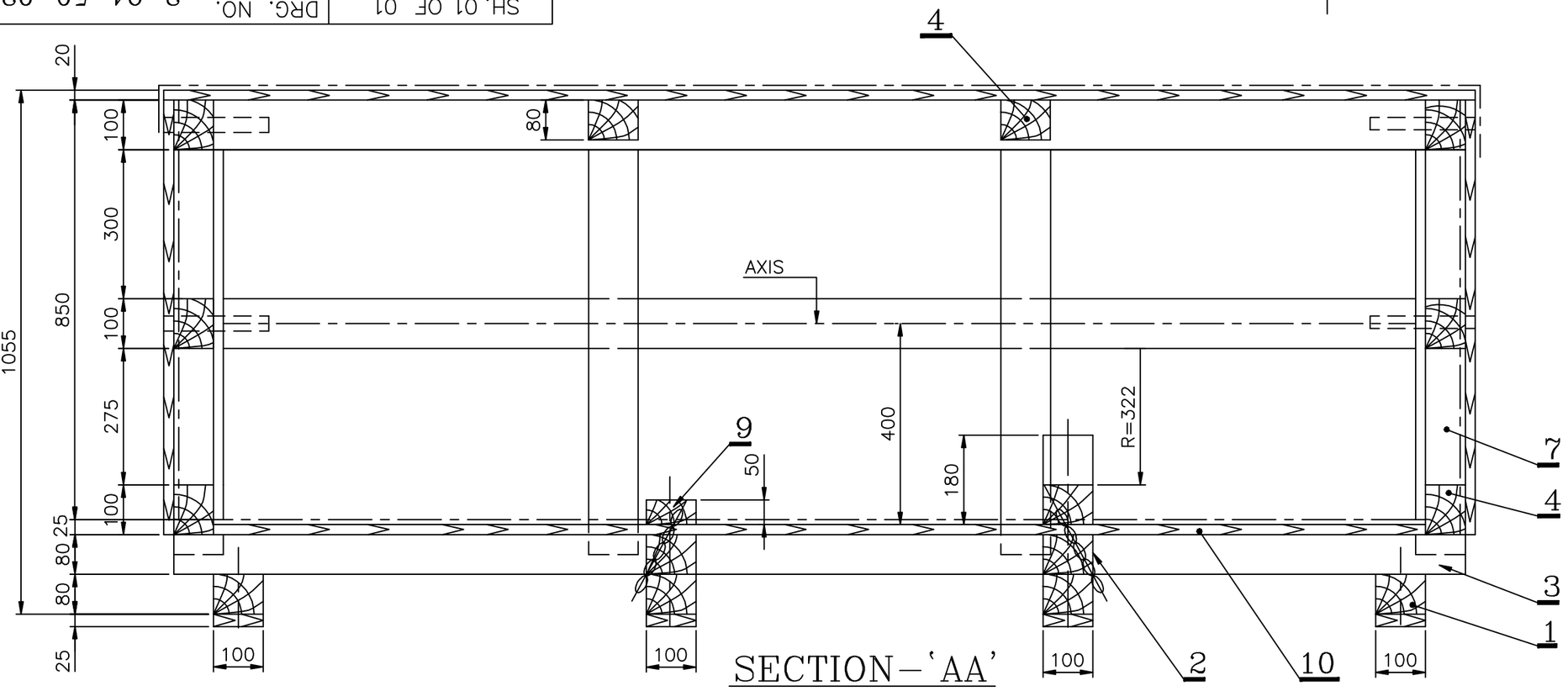


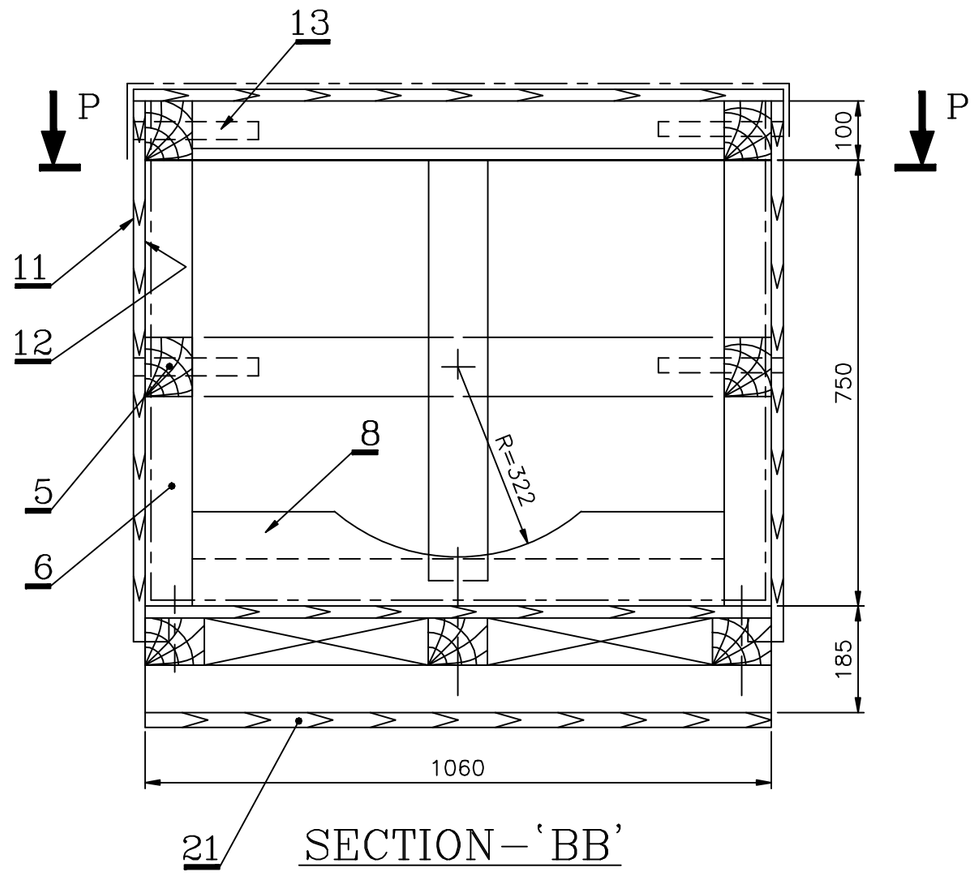


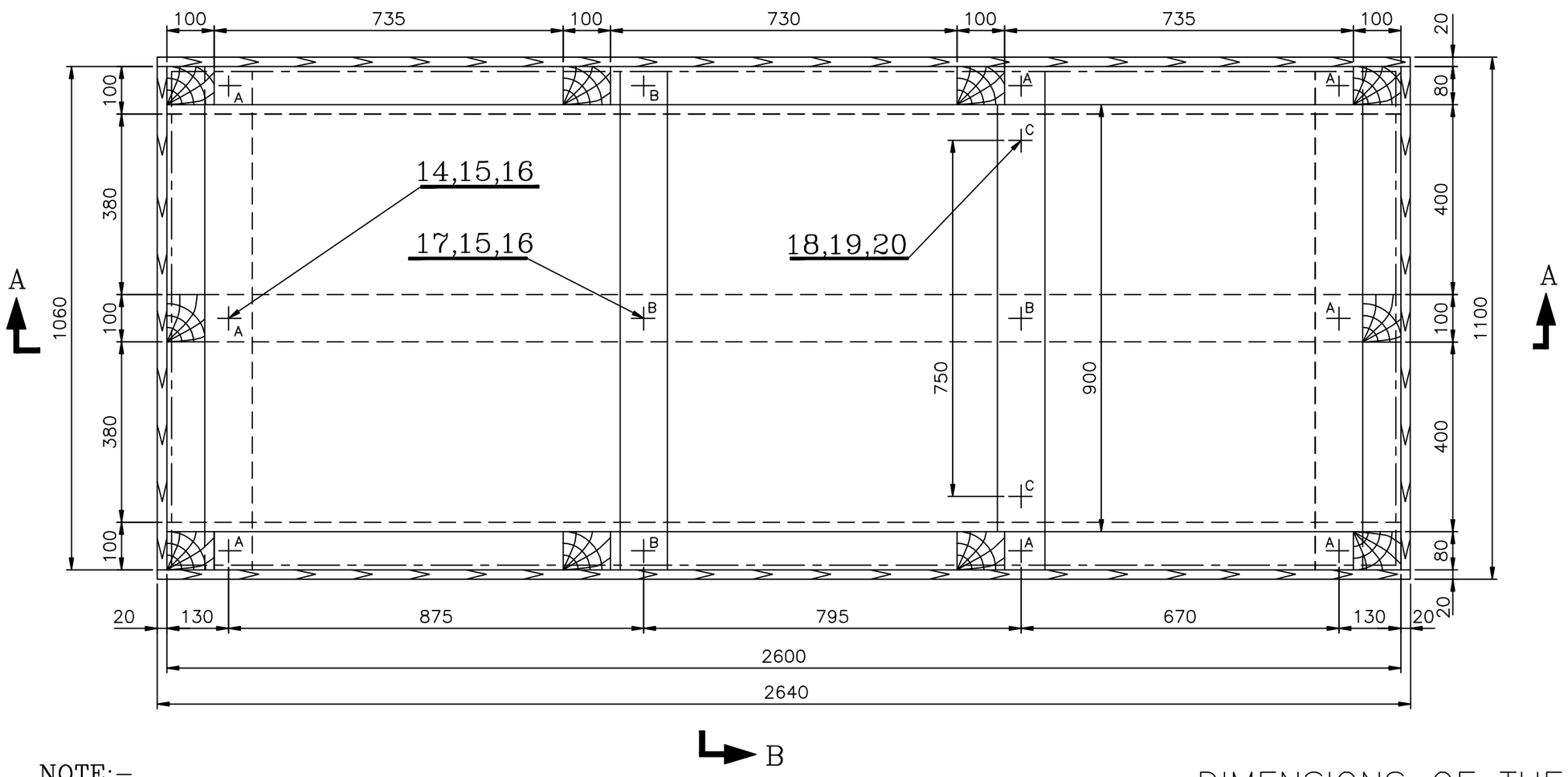


NOTE:–

1. PACKING INSTRUCTIONS AS PER HY:0490572.
2. PACKING WOOD AS PER HY:51463.
3. COMPONENT PRESERVATION AS PER HY:0490563.

DIMENSIONS OF THE CASE :
2640 x 1100 x 1055
NET WEIGHT : 1950 Kgs

| POS NO. | DESCRIPTION | SIZE | NO.OF PCS |
|---|---|---|---|
| 21 | BOTTOM WOODEN PLANK | 25 mm. THICK | – |
| 20 | WASHER | ø18 | 2 |
| 19. | NUT | M16 | 2 |
| 18. | SQ.HD.BOLT 'C' | M16 x 400 | 2 |
| 17. | SQ.HD.BOLT 'B' | M12 x 220 | 4 |
| 16. | WASHER | ø14 | 12 |
| 15. | NUT | M12 | 12 |
| 14. | SQ.HD.BOLT 'A' | M12 x 200 | 8 |
| 13. | STEEL BRACKET | 200 x 200 x 30 x 3.15 THICK | 8 |
| 12. | H.B.P COATED KRAFT PAPER | SIDES & BOTTOM(INSIDE) TOP(OUTSIDE) | |
| 11. | PLANK(SIDES & TOP) | 20mm THICK | – |
| 10. | BOTTOM PLANK | 25mm THICK | – |
| 9. | PEDESTAL BEAM | 50 x 100 x 1060 | 1 |
| 8. | PEDESTAL BEAM | 100 x 160 x 900 | 1 |
| 7. | STRUT | 80 x 100 x 725 | 2 |
| 6. | STRUT | 80 x 100 x 815 | 8 |
| 5. | HORIZONTAL RUNNER | 80 x 100 x 2600 | 4 |
| 4. | HORIZONTAL RUNNER | 80 x 100 x 900 | 8 |
| 3. | SUPPORTING BEAM | 80 x 100 x 2600 | 3 |
| 2. | INTERMEDIATE BEAM | 80 x 100 x 380 | 4 |
| 1. | SKID | 80 x 100 x 1060 | 4 |

TYPE OF PRODUCT OR
NAME OF CUSTOMER/PROJECT
BHARAT HEAVY ELECTRICALS LTD.

BHARAT HEAVY ELECTRICALS LTD.
HYDERABAD

| | NAME | SIGN. | DATE | NO.OF VAR. |
|---|---|---|---|---|
| DRN. | SCS/CPDC | | 28.3.98 | |
| CHD. | | | | |
| APPD. | | | | |

| REV. | DATE | ALTERED | CHD/APPD |
|---|---|---|---|
| 01 | 9.02.93 | POS. NO.8 HEIGHT 60 TO 180<br>POS. NO. M8 M16x300 M120 x 400 | |

DEPT. CPDC | CODE 840C | UNTOL. DIMS. GR. ~~C/M/F~~ | SCALE (1:10) | WEIGHT (KG) –N.A.– | REF. TO ASSY. DRG. –N.A.– | ITEM NO. –N.A.– | NO.OF ITEMS –N.A.–

TITLE PACKING CASE FOR F.K.6D 30 TYPE B.F PUMP (WEIR) CARTRIDGE ASSY.

CARD CODE N.A.

DRAWING NO. 2–94–50–0237 REV. 01

SHT. No 01 NO. OF SHT. 01